Hanwha Vision

SÍŤOVÁ KAMERA

Stručná příručka

PNM-C32083RQZ
PNM-C16083RQZ

CE

Important

Please check 'Manuals' from our website, before connecting to the Supply,
https://www.hanwhavision.com/en/download-data/

Warranty

Please check "Product warranty information" from our website.
https://www.hanwhavision.com/en/support/warranty/

We recommend to use the officially compatible VMS version or latest Hanwha NVR version when integrating with VMS or Hanwha NVR.

eco
RoHS compliant

Hanwha Vision cares for the environment at all product manufacturing stages, and is taking measures to provide customers with more environmentally friendly products.
The Eco mark represents Hanwha Vision's devotion to creating environmentally friendly products, and indicates that the product satisfies the EU RoHS Directive.

Correct Disposal of This Product (Waste Electrical & Electronic Equipment)

(Applicable in the European Union and other European countries with separate collection systems)

This marking on the product, accessories or literature indicates that the product and its electronic accessories (e.g. charger, headset, USB cable) should not be disposed of with other household waste at the end of their working life. To prevent possible harm to the environment or human health from uncontrolled waste disposal, please separate these items from other types of waste and recycle them responsibly to promote the sustainable reuse of material resources.

Household users should contact either the retailer where they purchased this product, or their local government office, for details of where and how they can take these items for environmentally safe recycling.

Business users should contact their supplier and check the terms and conditions of the purchase contract. This product and its electronic accessories should not be mixed with other commercial wastes for disposal.

Correct disposal of batteries in this product

(Applicable in the European Union and other European countries with separate battery return systems.)

This marking on the battery, manual or packaging indicates that the batteries in this product should not be disposed of with other household waste at the end of their working life. Where marked, the chemical symbols Hg, Cd or Pb indicate that the battery contains mercury, cadmium or lead above the reference levels in EC Directive 2006/66. If batteries are not properly disposed of, these substances can cause harm to human health or the environment.

To protect natural resources and to promote material reuse, please separate batteries from other types of waste and recycle them through your local, free battery return system.

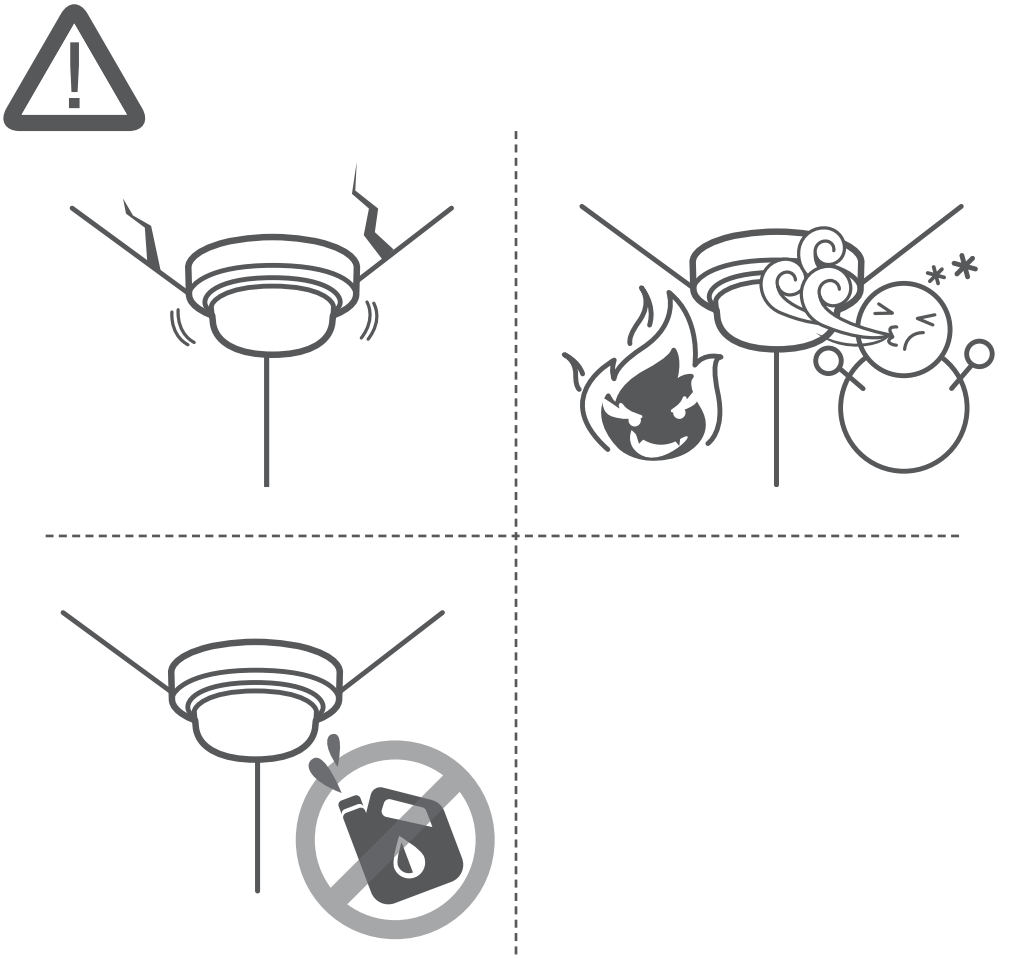

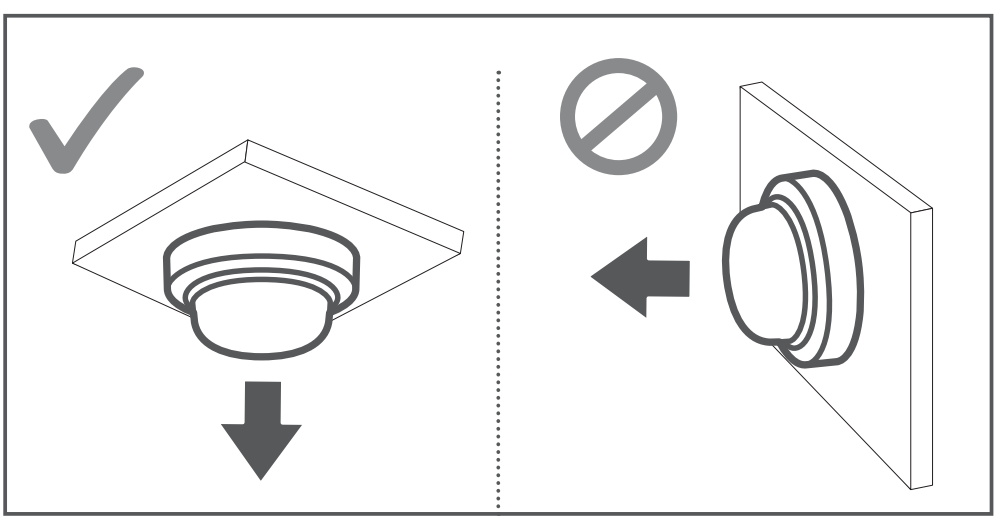

COMPONENT

Příslušenství není pro všechny země prodeje stejné.

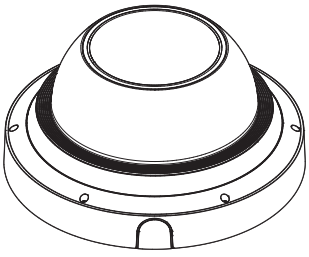

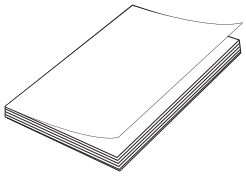

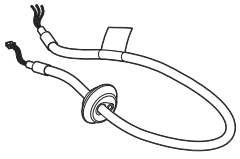

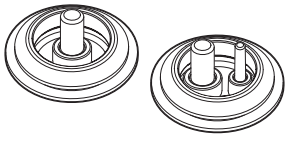

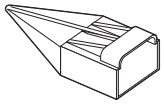

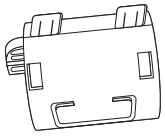

Možnosti (Nezahrnuto)

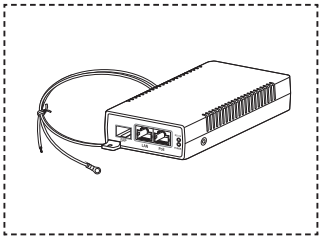

SPO-6011

INSTALLATION

1

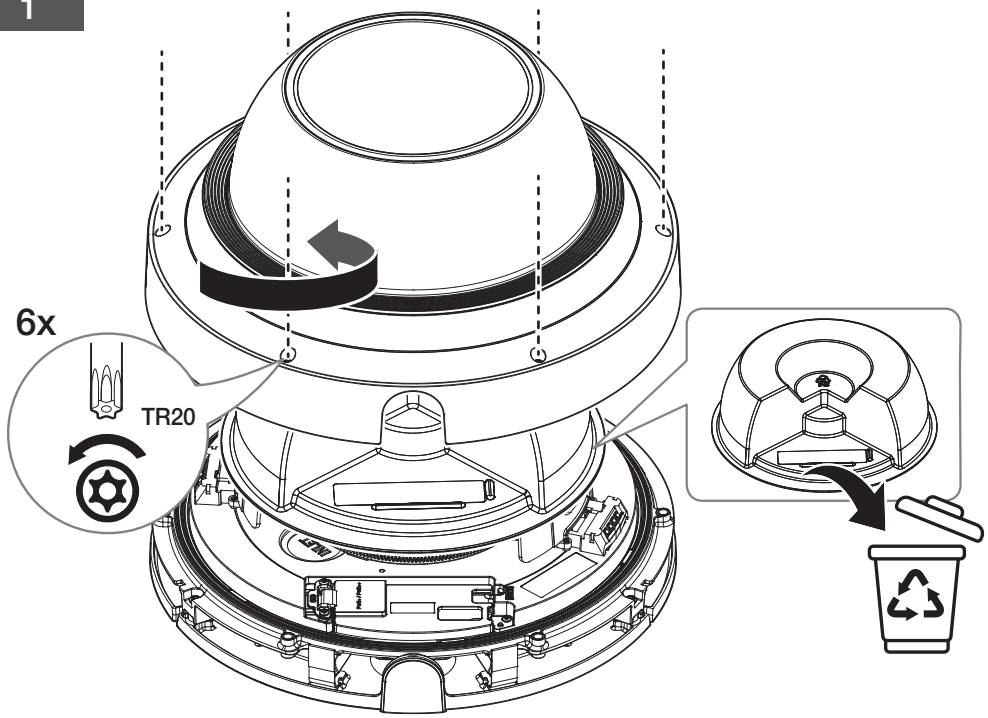

2

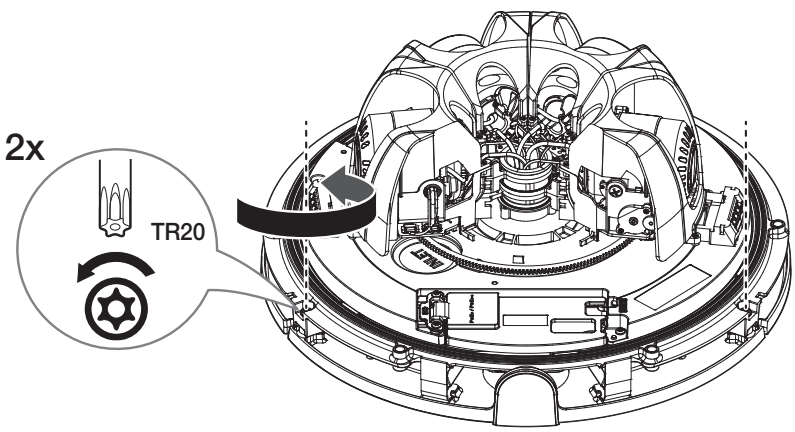

3

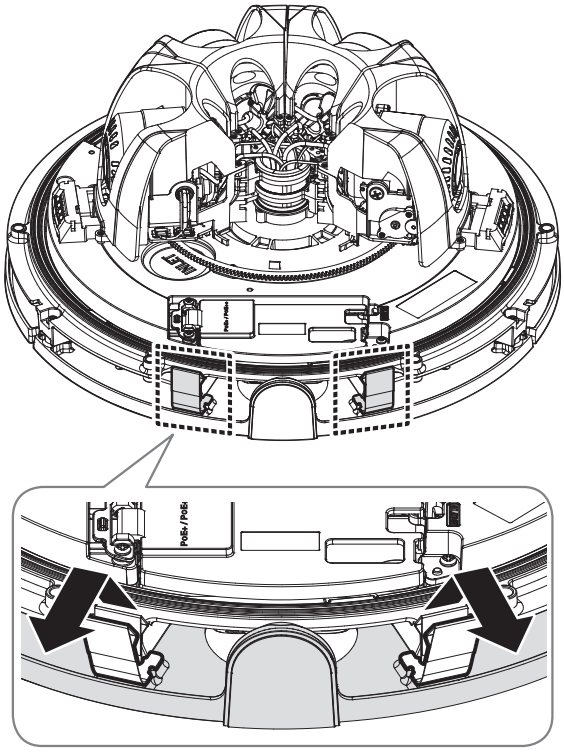

4

• Nezahrnuto: Micro SD karta

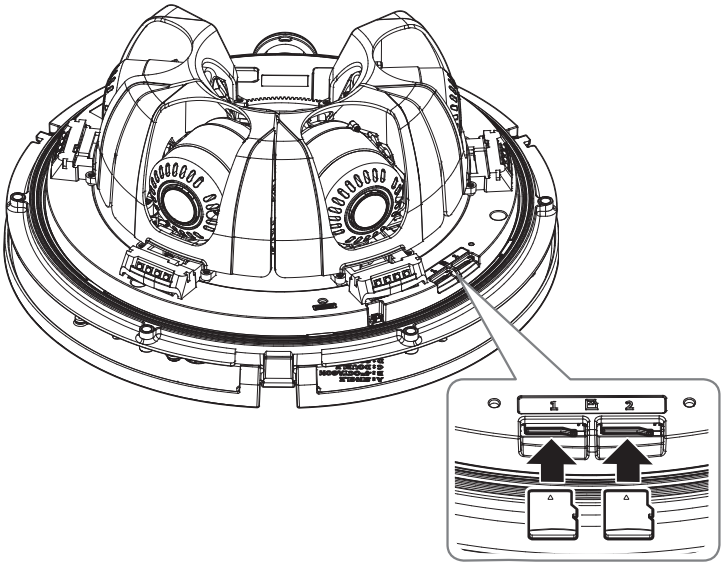

5 • Přímá instalace na strop

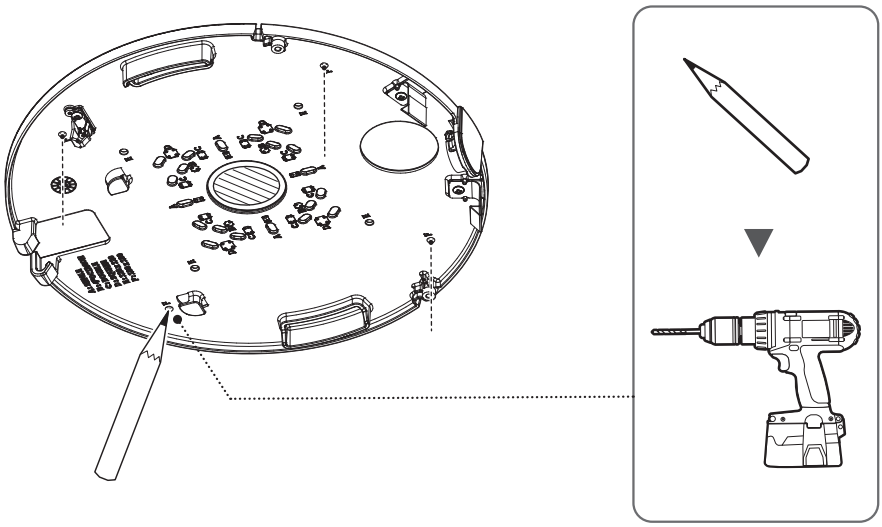

6-1

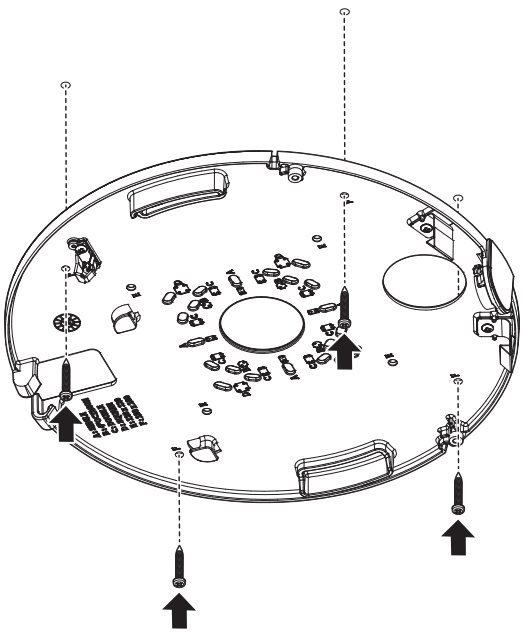

6-2

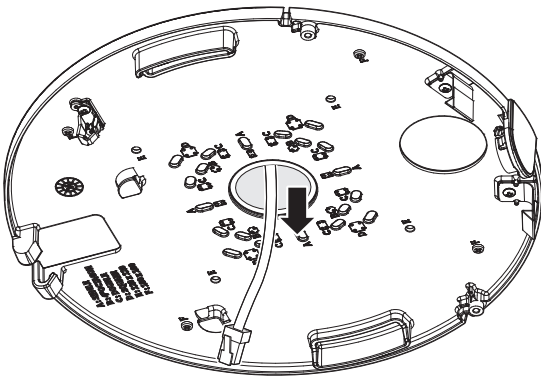

7-1

• Instalace pomocí trubky

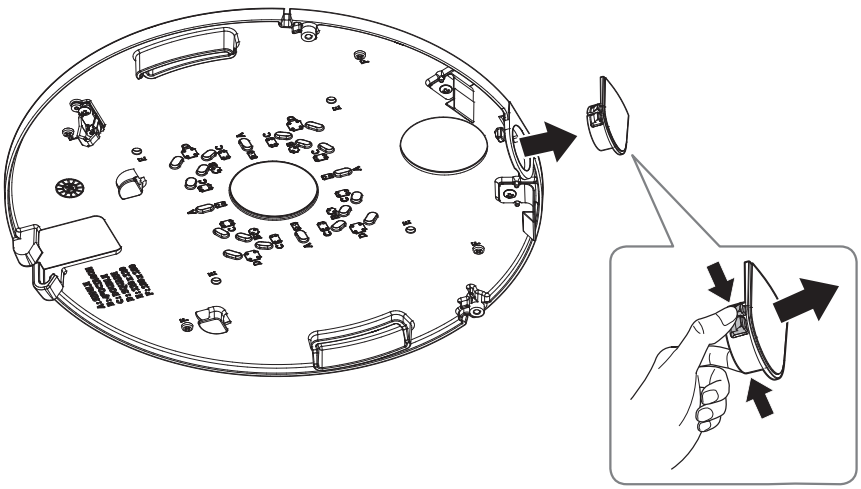

7-2

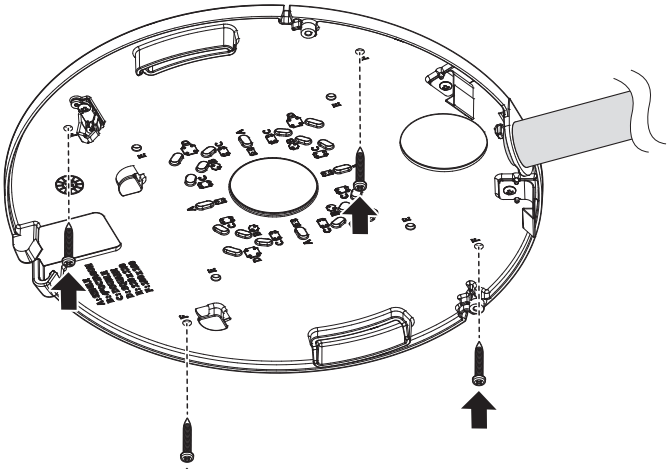

7-3

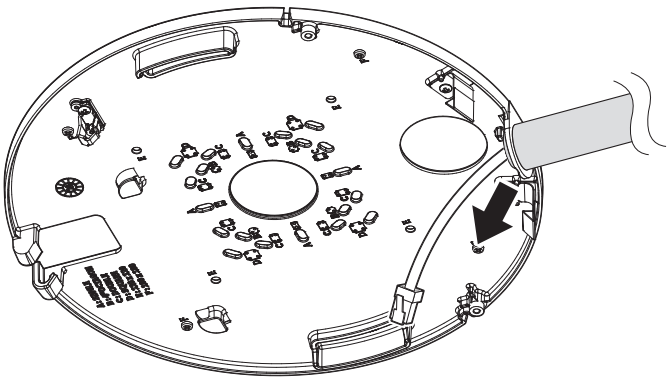

8

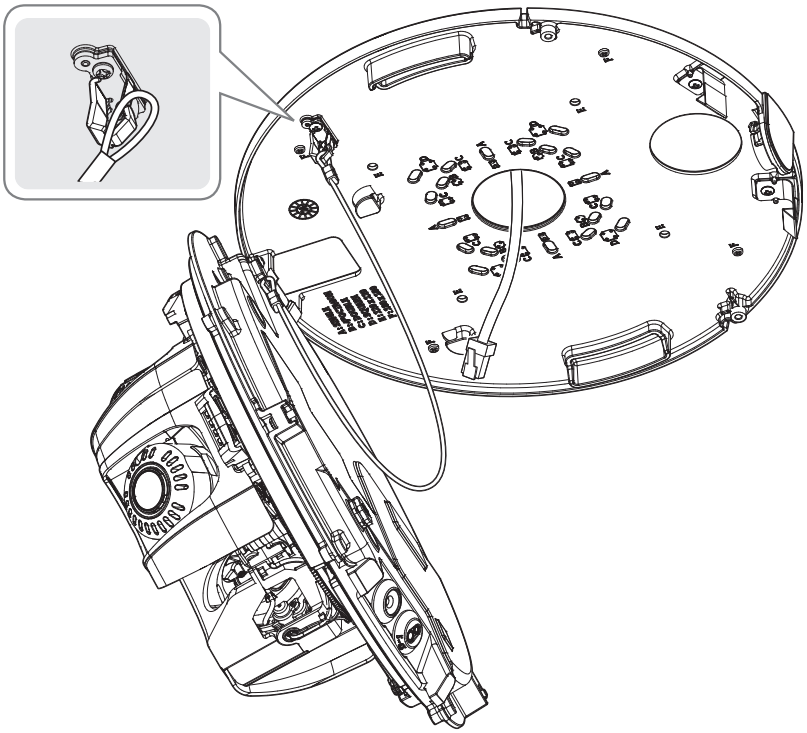

9

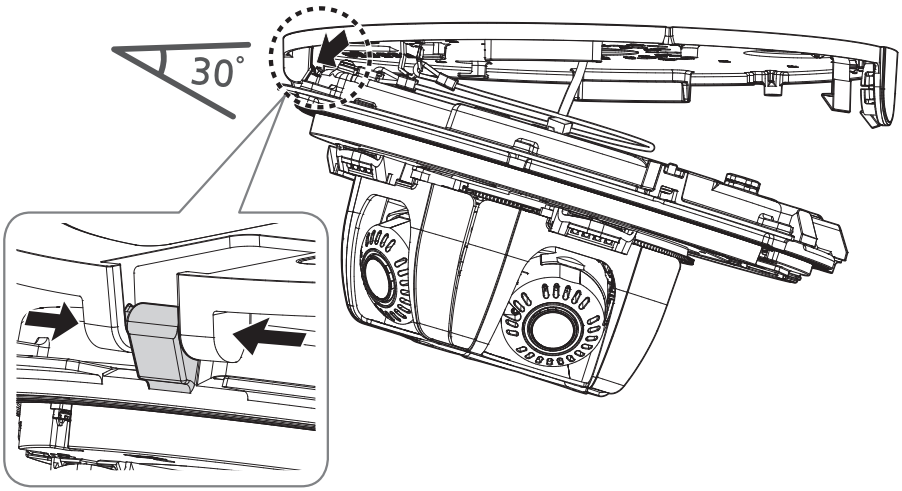

10

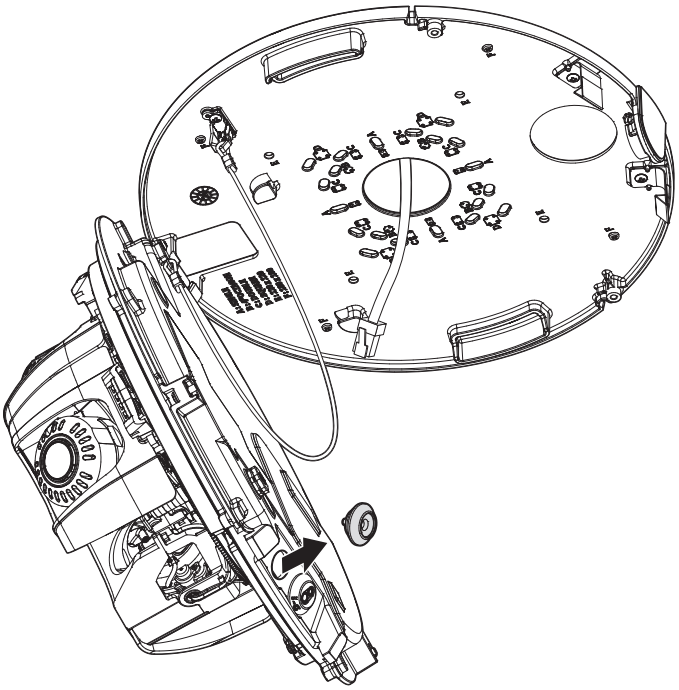

11 • Instalace síťového kabelu (IP66)

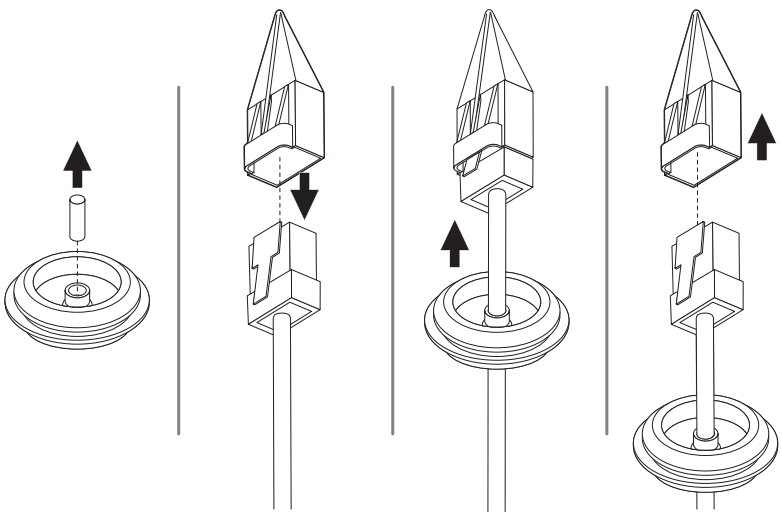

12

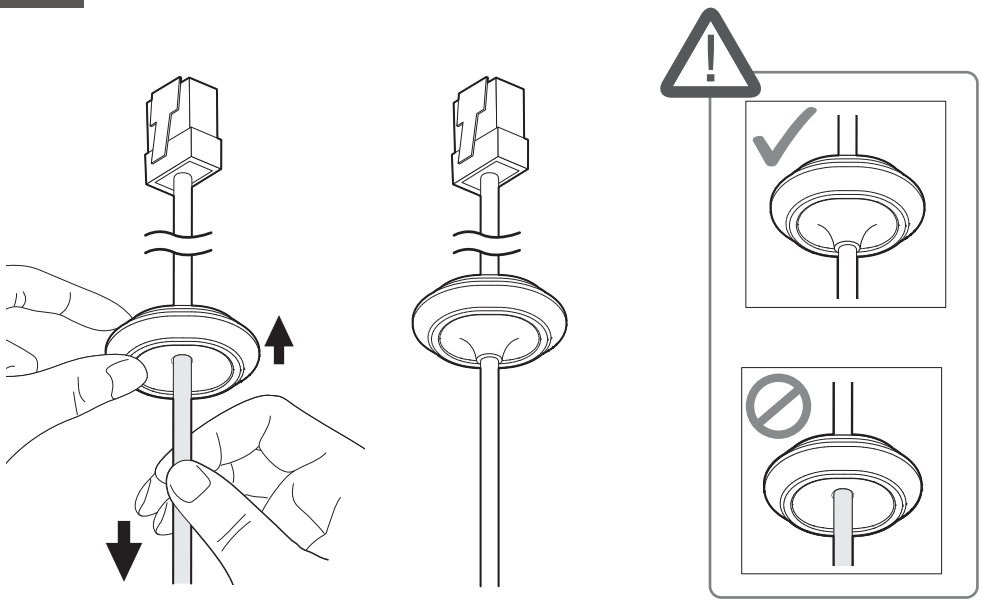

13

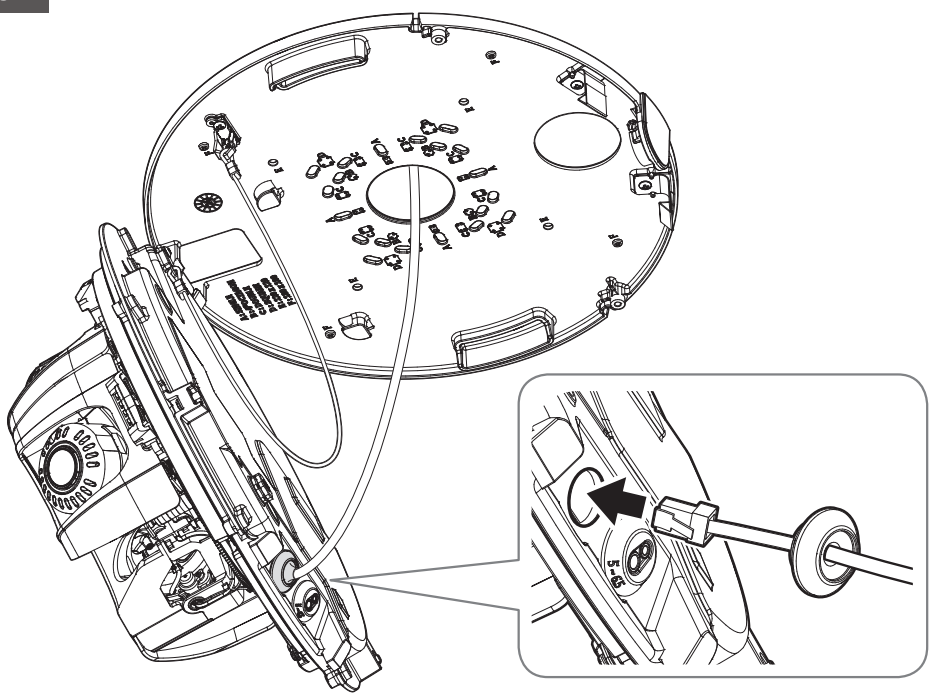

14

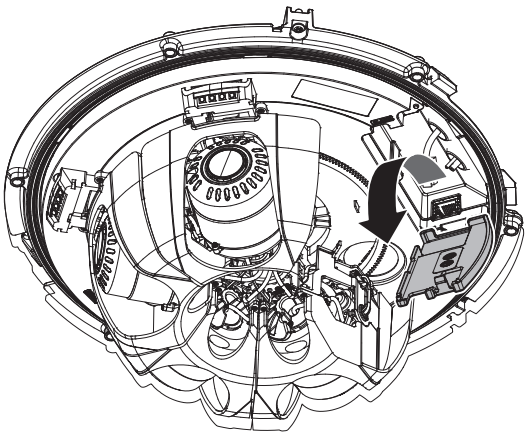

15

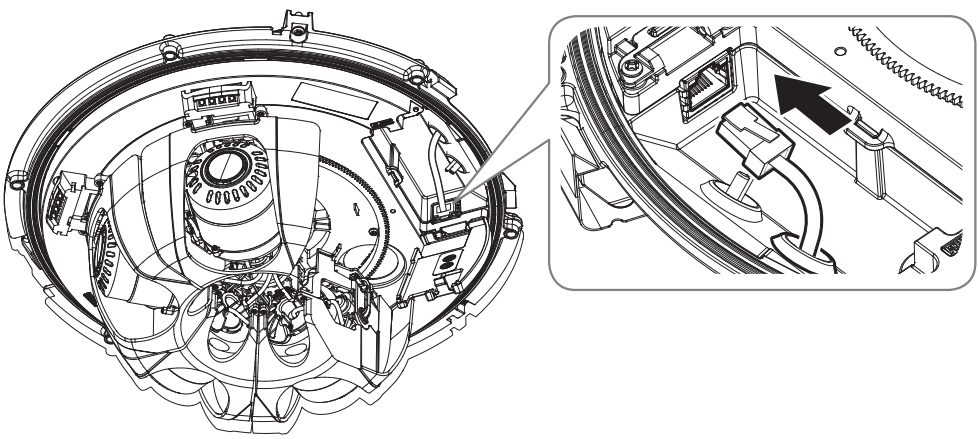

16 • Instalace kabelů poplašného zařízení

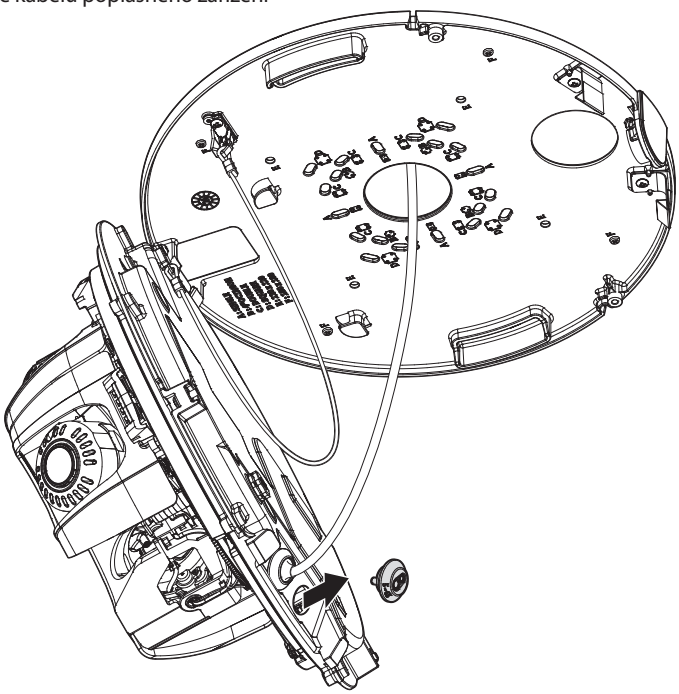

17

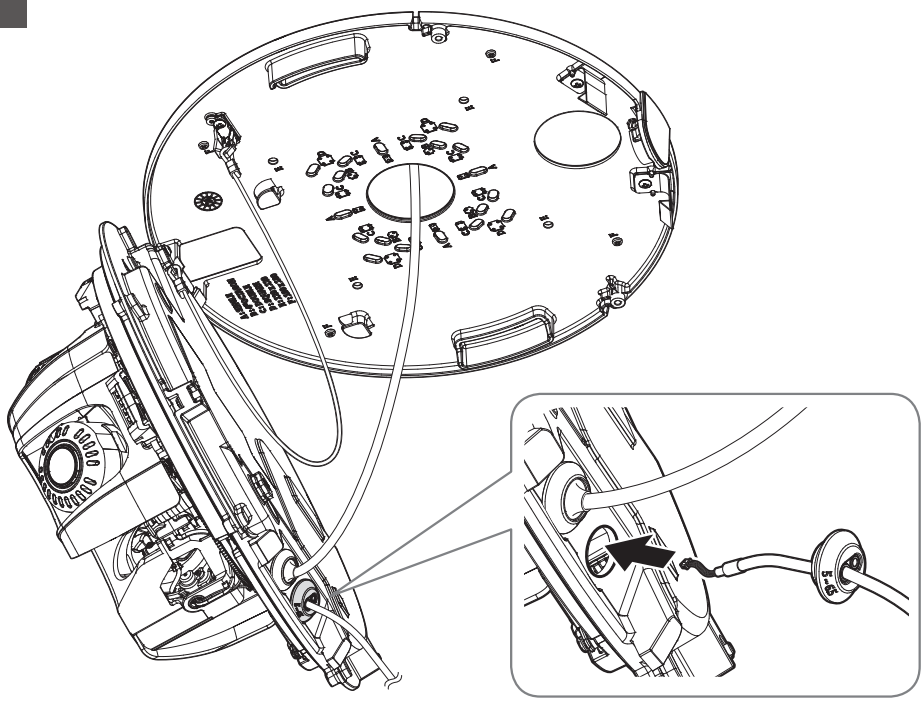

18

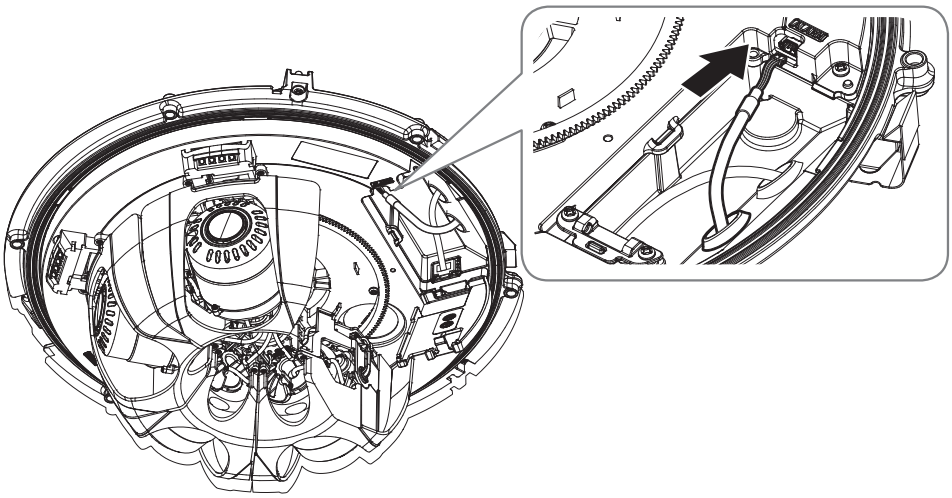

19

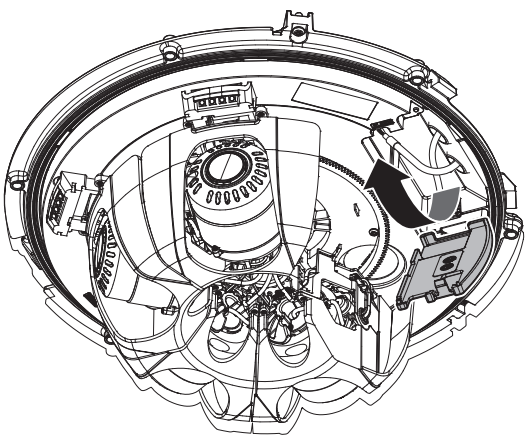

20

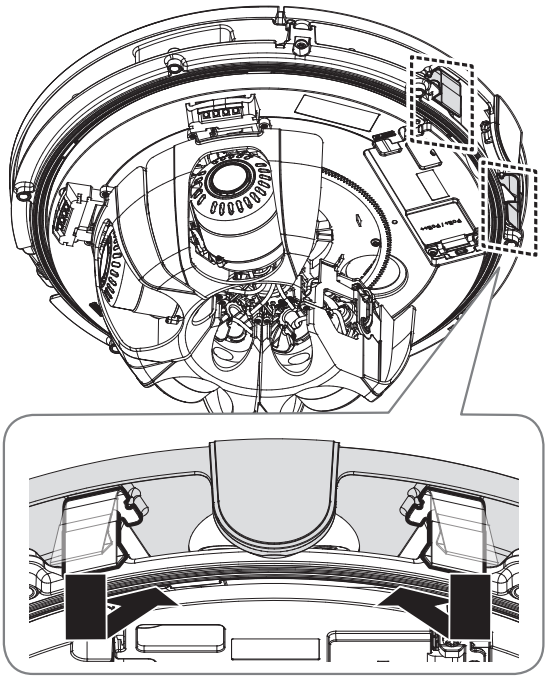

21

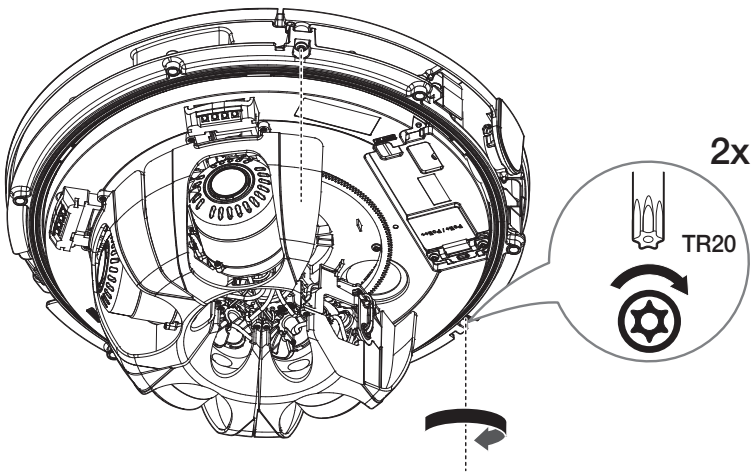

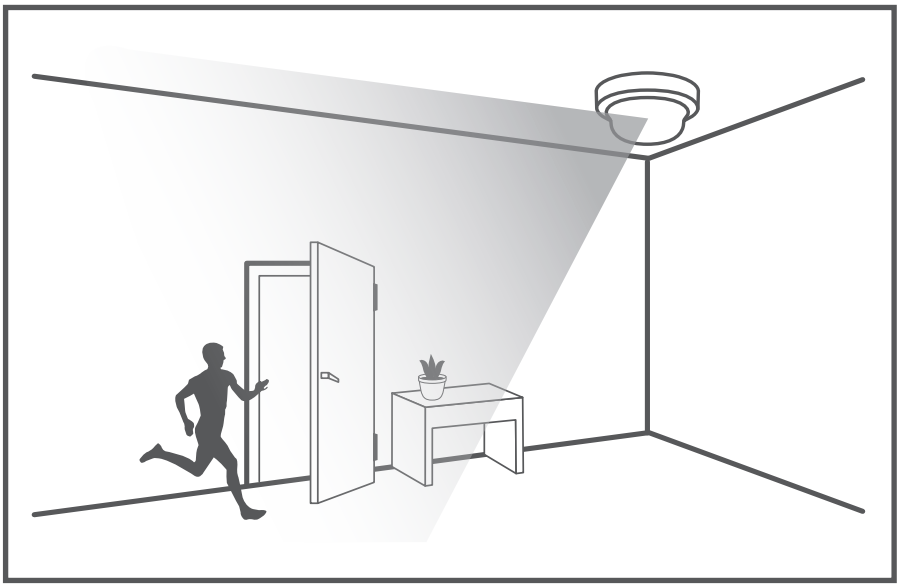

22

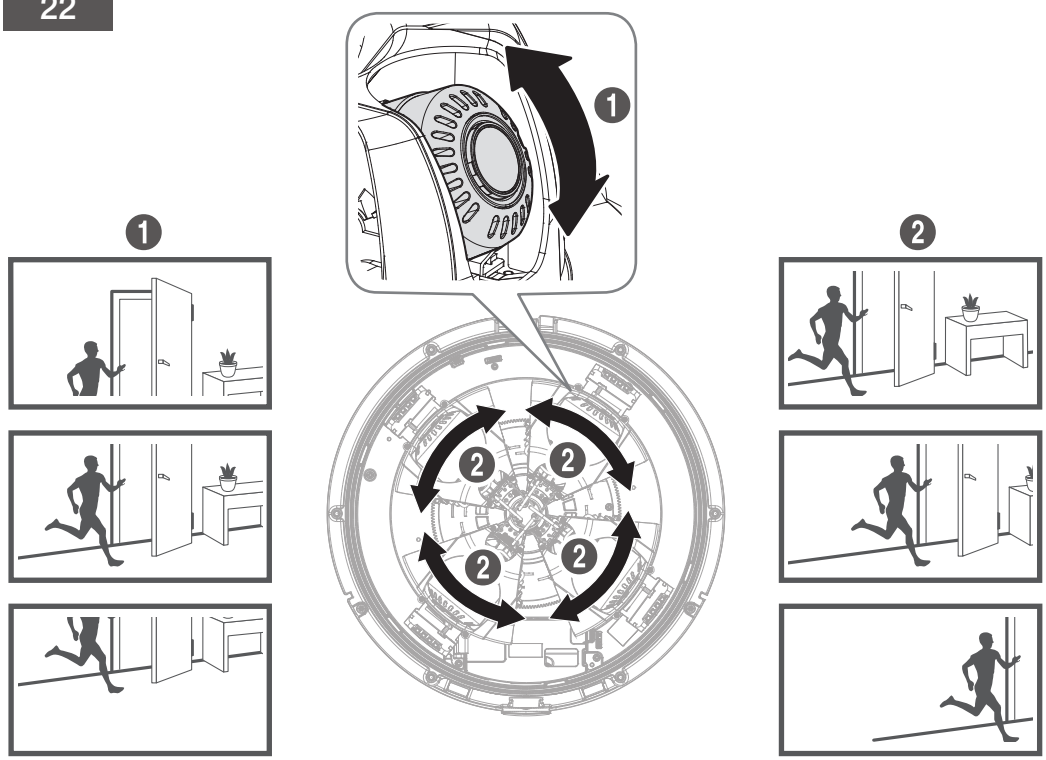

23

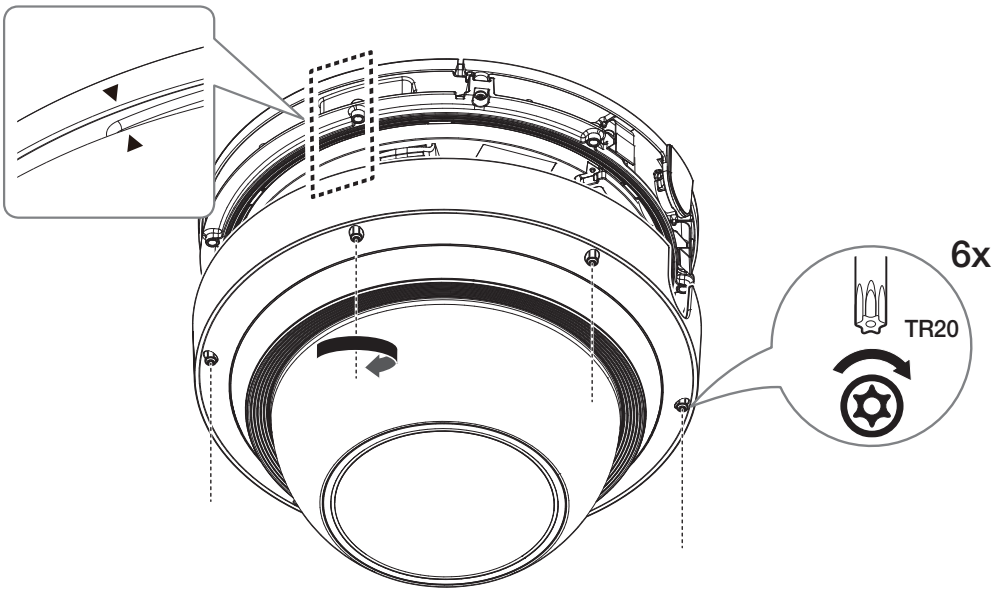

24

NASTAVENÍ HESLA

Při prvním otevření produktu musíte zaregistrovat přihlašovací heslo.

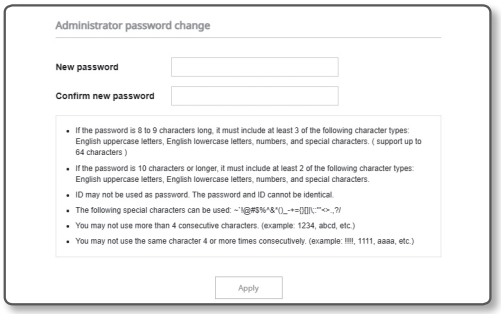

- Pro nové heslo s 8 až 9 znaky musíte použít alespoň 3 z následujících typů znaků: velké písmeno/malé písmeno, číslice a speciální znaky. Pro heslo s 10 znaky nebo delší musíte použít alespoň 2 typy výše uvedených znaků. (podporováno je až 64 znaků)
  - Povolené speciální znaky. : ~`!@#$%^&*()_-+={}[]|\;:'"<>.,?/
- Mezera není v heslu povolena.
- Pro vyšší zabezpečení nedoporučujeme při zadávání hesla opakovat stejné znaky nebo po sobě jdoucí klávesy.
- Pokud jste ztratili své heslo, stiskněte tlačítko [**RESET**] a spusťte produkt. Neztraťte tedy své heslo, použijte poznámkový blok nebo si ho zapamatujte.

PŘIHLÁŠENÍ

Při pokusu o přístup ke kameře se zobrazí okno pro přihlášení.
Pro přístup ke kameře zadejte uživatelské jméno a heslo.

1. Vepište „**admin**“ do vstupního pole <**User Name**>.
2. Zadejte heslo do pole <**Password**>.
3. Klepněte na tlačítko [**Sign in**].

HEVC Advance™
Covered by patents at patentlist.accessadvance.com

microSD, microSDHC, and microSDXC Logos are trademarks of SD-3C LLC. microSD, microSDHC, microSDXC are trademarks or registered trademarks of SD-3C, LLC in the United States, other countries or both.

EAC

Подлежит использованию по назначению
в нормальных условиях
Срок службы : 7 лет.

Türkiye Distribütörü

EDS Elektronik Destek Sanayi ve Ticaret Ltd. Şti.
Meclis Mah. Teraziler Cad. Hayran Sk. (Eskisi Kılıç Sk.) No: 4 Sancaktepe / İstanbul / Türkiye
Tel +90.216.313.25.15

ENTES ELEKTRONİK CİHAZLAR İMALAT VE TİC. A.Ş.
Dudullu Org.San.Bölg. 1. Cad. No:23 34776 Ümraniye / İstanbul / Türkiye
Tel +90.216.313.01.10

TEKNOMAKS TEKNOLOJI / TEKNOMAKS BILISIM
MERDİVENKÖY MAH.DİKYOL SOK. BUSINESS ISTANBUL No:2, Kat:7, D:B67, 34732 Kadıköy / İstanbul / Türkiye
Tel +90.212.217.54.22

Cihazın Ticaret Bakanlığınca önerilen ortalama ömrü
Cihazın EEE yönetmeliklerine uygun olduğuna benzer beyan

Hanwha
Vision